DESCRIPTION:
FAN #2 AH-SIF24DD-HESS-UL762 - EXHAUST FAN (PCU-1) - POLLUTION CONTROL UNIT WITH CORE PROTECTION FIRE SYSTEM INSTALLED. INCLUDES STEEL PRE FILTER MODULE, HIGH EFFICIENCY MERV 15 FILTER MODULE, AND ODOR CONTROL MODULE PREPIPED WITH 32 OL-M NOZZLES AND INCLUDES DOWNSTREAM PROTECTION. ELECTRIC FIRE DETECTOR AND NOZZLES ARE INCLUDED.

PCU FILTER SPECIFICATIONS					
DESIGN CFM - 3987					
MODULE	FILTER TYPE	FILTER EFFICIENCY	QTY	SIZE	SP(CLEAN) (in WC)
1	CAPTRATE SOLO	MERV 8	12	20X25X2	0.159
2	HIGH EFFICIENCY	MERV 15	12	20X25X4	0.105
3	HIGH EFFICIENCY	MERV 15	12	20X25X4	0.105
4	DC 100% CARBON	N/A	12	20X25X4	0.300
					0.669

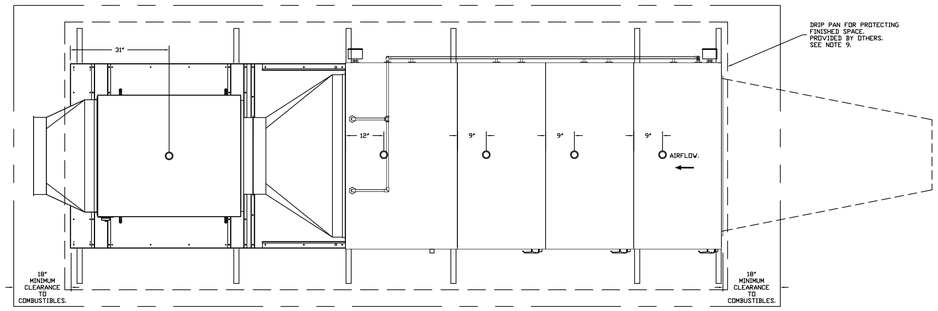

INLET NOTES:
1. LENGTH OF STRAIGHT DUCT ON INLET OF PCU TO BE 3 TIMES THE EQUIVALENT DUCT DIAMETER TO AVOID SYSTEM EFFECT.

2. MAX INLET DUCT VELOCITY TO BE 800 FPM INTO THE PCU. DUCTWORK SHOULD BE SIZED APPROPRIATELY.

3. DUCT MUST BE GRADUALLY TRANSITIONED TO THE INLET OPENING OF THE PCU TO SPREAD AIR OUT ON ALL PCU FILTERS. FAILURE TO DO THIS WILL RESULT IN ODOR AND SMOKE BYPASS.

-A SERVICE PLATFORM MUST BE INSTALLED ON THE FILTER SIDE OF THE UNIT FOR PROPER FILTER MAINTENANCE.
-THE PLATFORM MUST BE THE SAME LENGTH AS THE PCU AND AT LEAST 3 FEET WIDE.
-THE PLATFORM MUST BE STRUCTURALLY SUPPORTED BY THE BUILDING, INDEPENDENT OF THE PCU.
-THE PLATFORM MUST BE DESIGNED TO PROPERLY SUPPORT THE WEIGHT OF ALL PCU FILTERS AND MAINTENANCE PERSONNEL.
-HANDRAILS MUST BE INSTALLED ON THE SERVICE PLATFORM TO PROTECT MAINTENANCE PERSONNEL.

FAN OPTIONS:

- SIF 24- SS LOW SP STRAIGHT DISCHARGE- SQUARE TO ROUND DISCHARGE ADAPTER
- SIF24 - INLET - STANDARD 24" DUCT CONNECTION
- PCU-SIZE 5 SIF-24 HESS
- OPPOSITE SIDE CONTROLS- SIF
- FULL CRATING FOR EXHAUST FANS
- POLLUTION CONTROL UNIT WITH PREFILTER, DUAL HIGH EFFICIENCY, AND PREFILTER BANK WITH INSTALLED ELECTRICAL DETECTION SYSTEM SIZE 5
- 2 YEAR PARTS WARRANTY

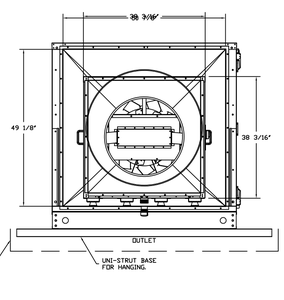

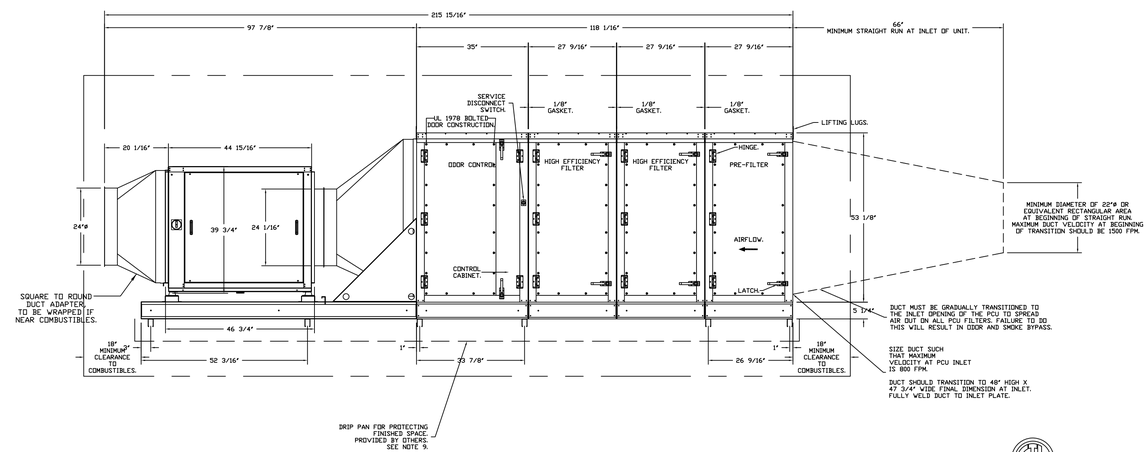

FAN #2 AH-SIF24DD-HESS-UL762 - EXHAUST FAN (PCU-1) - PCU #1
AH-PCU-IF-HE-HE-SC-OFS-S

FAN WEIGHT = 2304LBS
PCU LOCATION: INDOOR (CONDITIONED SPACE).

NOTE: TWO HANGERS PER UNIVERSAL STRUT.

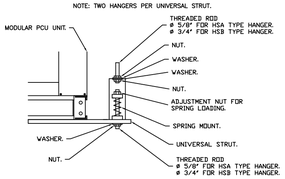

TYPICAL "HS" UNIT SPRING MOUNTING

PLEASE REFER TO ADDITIONAL INLET NOTES 1-3.

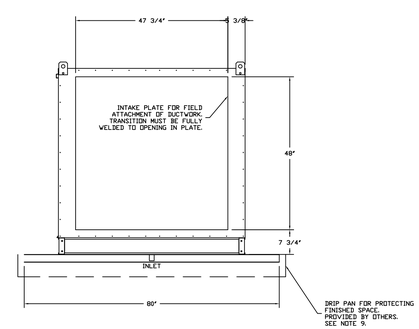

NOTES:
1. ALL DIMENSIONS ARE NOMINAL AND GIVEN IN INCHES.

2. C/US UL710 LISTED FOR GREASE DUCT INSTALLATION.

3. UL762 RATED DIRECT DRIVE SQUARE INLINE FAN WITH 24.75" HIGH EFFICIENCY MIXED FLOW WHEEL.

4. WHEN USED IN KITCHEN GREASE DUCT, UNIT MUST BE INSTALLED DOWNSTREAM OF A LISTED HOOD ASSEMBLY OF A UL710 LISTED HOOD ASSEMBLY OR A NFPA 96 COMPLIANT HOOD AS LONG AS IT IS INSTALLED WITH A FIRE SUPPRESSION SYSTEM THAT IS INTERLOCKED WITH THE NFPA 96 COMPLIANT HOOD FIRE SYSTEM.

5. CLEARANCE ON FILTER ACCESS SIDE OF THE PCU SHOULD BE A MINIMUM OF 36" FOR PROPER SERVICE OF THE UNIT. ALL OTHER SIDES SHOULD FOLLOW CLEARANCE TO COMBUSTIBLE GUIDELINES PER CODE.

6. UNIT CONTAINS PRESSURE MONITORING SWITCH. REFER TO ELECTRICAL SCHEMATIC OR OPERATION MANUAL FOR MORE INFORMATION.

7. 1.5" NPT DRAIN SUPPLIED IN EACH MODULE BASE. CONNECT INDIVIDUAL DRAINS TO A COMMON 3" DRAIN AND ROUTE TO GREASE INTERCEPTOR.

8. FIRE SYSTEM TO BE INSTALLED INDOORS OR IN A WEATHERTIGHT ENCLOSURE MAINTAINED BETWEEN 32° AND 130° F. THIS ENCLOSURE IS PROVIDED BY OTHERS.

9. WHEN THE PCU IS INSTALLED ABOVE OR NEAR A FINISHED SPACE, THE INSTALLING CONTRACTOR MUST PROVIDE DRIP PAN TO PROTECT FROM WATER DAMAGE IN THE EVENT OF A FIRE SYSTEM DISCHARGE OR WHEN REGULAR CLEANING IS PERFORMED ON THE UNIT.

10. POLLUTION CONTROL UNIT IS RATED FOR INDOOR USE WHEN INSTALLED IN ACCORDANCE WITH IMC 506.5.2.4, INCLUDING THE USE OF A FIRE RATED ENCLOSURE AS APPLICABLE.

PCU OPTIONS:
- FULL CRATING FOR POLLUTION CONTROL UNITS FOR SHIPPING.
- INDOOR HANGING CRADLE FOR SIZE 5 PCU WITH 3 OR 4 MODULES AND USBI BLOWER. 6 PIECES OF UNI-STRUT, 80 INCHES LONG EACH. 2 HS8450 HANGING ISOLATORS PER UNI-STRUT INCLUDED. FOR USE WITH USBI BLOWERS.
- PCUAFW WITH HMI SCREEN, BACK PLATE WITH LABEL, AIRLINES/ QUICK CONNECTS/ AIR PROBES, CONDUIT/ FITTINGS/WIRING HARNESS.
- UNIVERSAL BALL VALVE SUPERVISION SWITCH KIT FOR 1-1/2" PIPE; INCLUDES BALL VALVE.
- INTAKE PLATE FOR SIZE 5 PCU WITH 47 3/4" X 48" HOLE FOR DUCT CONNECTIONS FOR USE WITH CUSTOM DUCT FITMENT OR FIELD FITMENT.
- UL 1978 BOLTED DOOR DESIGN FOR PCU DOORS- INCLUDES CAGE NUTS AND BOLTS.

REVISIONS

DESCRIPTION	DATE

ADVANCED HOOD SYSTEMS
Advanced Hoods Systems, LLC
FL. PHONE: FAX: 9192270974 EMAIL: shawn@advancedhoodsystems.com

Windward ARC
Kitchen & Bar
Nassau, Bahamas

uni-source SUPPLY
INTERNATIONAL INC.
2055 W 73rd Street, Miami, FL 33016
Ph:(305)826-8696 Fax:(305)826-9131

Windward ARC Kitchen - Bahamas
Hialeah, FL,

No.	Revision/Issue	Date
5	Added MEP & Hood Shops	3-12-24
6	Moved Bev Table, adjusted hot line. Added Chef Desk.	4-4-25
7	Changed #9 Refrigerators, moved sink #117	4-20-25
8	Added modifications to #61-#21-#31	01-14-26

Date
Jan 14, 2026
Drawn By
Dayne Gauntlett
Scale
NTS

Sheet
FS-6.6

DATE: 3/11/2024
DWG.#: 6328705
DRAWN BY: jseward
SCALE: 3/4" = 1'-0"
MASTER DRAWING
SHEET NO. 6