JOB #:	CUST. ID #:	INSTALL	DESCRIPTION OF OPERATION:
6328705	DCV-1111		Demand Control Ventilation, w/ control for 1 Exhaust Fan, 1 Supply Fan, Exhaust on in Fire, Lights out in Fire, Fans modulate based on duct temperature. INVERTER DUTY 3 PHASE MOTOR REQUIRED FOR USE WITH VFD. Room temperature sensor shipped loose for field installation/verify distance between VFD and Motor; additional cost could apply if distance exceeds 50 feet.
	Windward ARC Kitchen - Bahan...	3/11/2024	ECP #1-5

TANK PROTECTION LOW-VOLTAGE FIGURES

10/01/2023 Rev. 17

FS-1: MASTER

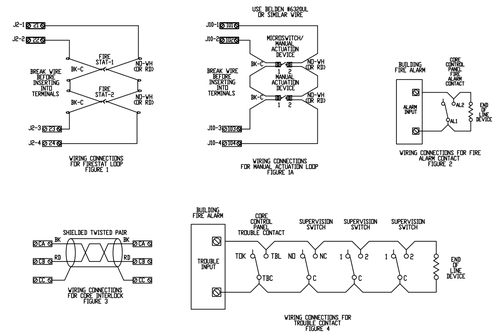

ATTENTION: LOW-VOLTAGE DC OR SIGNALING WIRE SHOULD BE ROUTED IN SEPARATE CONDUIT FROM ALL AC SOURCES

NOTE: SEE INSTALLATION, OPERATION, AND MAINTENANCE MANUAL FOR FURTHER INSTRUCTIONS

JOB #:	CUST. ID #:	INSTALL	DESCRIPTION OF OPERATION:
6328705	DCV-1111		Demand Control Ventilation, w/ control for 1 Exhaust Fan, 1 Supply Fan, Exhaust on in Fire, Lights out in Fire, Fans modulate based on duct temperature. INVERTER DUTY 3 PHASE MOTOR REQUIRED FOR USE WITH VFD. Room temperature sensor shipped loose for field installation/verify distance between VFD and Motor; additional cost could apply if distance exceeds 50 feet.
	Windward ARC Kitchen - Bahan...	3/11/2024	ECP #1-6

PCU CORE FIRE PROTECTION ELECTRICAL DETAIL

04/11/2017 Rev. 16

ELECTRICIAN
1) WIRE MAIN CONTROL PANEL PER INCLUDED SCHEMATIC

PCU-1 FS: SLAVE

ELECTRICAL CONTRACTOR REQUIREMENT					
ITEM	CONNECTION IN PANEL	CONNECTION ON DEVICE	VOLTAGE	AMPERAGE	COMMENTS
PCU CORE CONTROL PANEL POWER	H1, N1, GROUND	CIRCUIT BREAKER	120 VAC	15 AMPS	CONTROL PANEL POWER MUST NOT BE RUN THROUGH SHUNT TRIP BREAKER

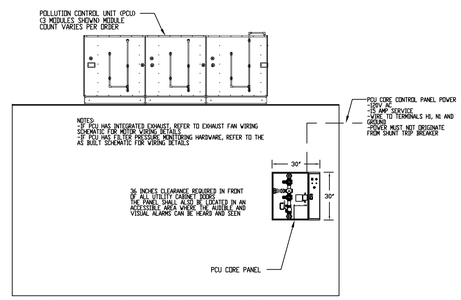

ATTENTION: LOW-VOLTAGE DC OR SIGNALING WIRE SHOULD BE ROUTED IN SEPARATE CONDUIT FROM ALL AC SOURCES.

NOTE: SEE INSTALLATION, OPERATION, AND MAINTENANCE MANUAL FOR FURTHER INSTRUCTIONS

ELECTRICAL CONTRACTOR

JOB #:	CUST. ID #:	INSTALL	DESCRIPTION OF OPERATION:
6328705	DCV-1111		Demand Control Ventilation, w/ control for 1 Exhaust Fan, 1 Supply Fan, Exhaust on in Fire, Lights out in Fire, Fans modulate based on duct temperature. INVERTER DUTY 3 PHASE MOTOR REQUIRED FOR USE WITH VFD. Room temperature sensor shipped loose for field installation/verify distance between VFD and Motor; additional cost could apply if distance exceeds 50 feet.
	Windward ARC Kitchen - Bahan...	3/11/2024	ECP #1-7

PCU CORE FIRE PROTECTION LOW-VOLTAGE WIRING DETAIL

10/01/2023 Rev.18

ALARM CONTRACTOR:
1) WIRE REMOTE FIRESTAT SENSOR(S), HOOD/PCU CORE INTERLOCK AND FIRE ALARM CONTACTS
2) COMPLETE FINAL HOOKUP OF SYSTEM
3) INSPECT ALL WIRING TO POLLUTION CONTROL UNIT
4) PERFORM FINAL FIRE SYSTEM TEST
5) FILL SURFACTANT TANK

PCU-1 FS: SLAVE

ALARM CONTRACTOR REQUIREMENT					
ITEM	CONNECTION IN PCU CORE PANEL	CONNECTION ON DEVICE	VOLTAGE	AMPERAGE	COMMENTS
FIRESTAT SENSORS(1)**	21 AND 24 22 AND 23	BLACK & WHITE	24 VDC	< 10 AMPS	WIRE FIRE SENSOR BLACK WIRES BETWEEN TERMINALS 22 AND 23. WIRE FIRE SENSOR WHITE (OR RED) WIRE BETWEEN TERMINALS 21 AND 24. USE BELDEN 6320UL OR SIMILAR WIRE
MANUAL ACTUATION DEVICE(S)	101 AND 104 102 AND 103	1 & 2	24 VDC	< 10 AMPS	WIRE MANUAL ACTUATION DEVICE TERMINAL 1 BETWEEN CORE PANEL TERMINALS 102 AND 103 WIRE MANUAL ACTUATION DEVICE TERMINAL 2 BETWEEN CORE PANEL TERMINALS 101 AND 104 JUMPER 101 TO 104 AND 102 TO 103 IF NO MANUAL ACTUATION DEVICE IS INSTALLED
CORE INTERLOCK	CA, CB, CC	CA, CB, CC	RS-485 COMMUNICATIONS SIGNAL		CORE SYSTEM (1) CA, TO CORE SYSTEM (2) CA. CORE SYSTEM (1) CB, TO CORE SYSTEM (2) CB. CORE SYSTEM (1) CC, TO CORE SYSTEM (2) CC. USE BELDEN 88760 OR SIMILAR WIRE
FIRE ALARM CONTACT	AL1, AL2	VARIES	50V MAX (AC/DC)	<1.0 AMPS	WIRE TO AL1 & AL2 NORMALLY OPEN CONTACT, CLOSES IN FIRE CONDITION
TROUBLE CONTACT	TBC, TBL, TDK	VARIES	MAX 120 VAC	UP TO 6 AMPS	WIRE TO TBL & TBC NORMALLY OPEN CONTACT, CLOSES IN TROUBLE CONDITION

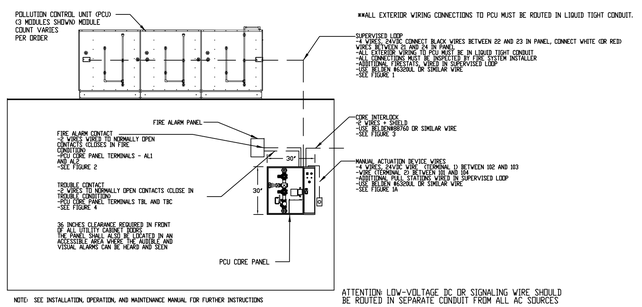

ATTENTION: LOW-VOLTAGE DC OR SIGNALING WIRE SHOULD BE ROUTED IN SEPARATE CONDUIT FROM ALL AC SOURCES

NOTE: SEE INSTALLATION, OPERATION, AND MAINTENANCE MANUAL FOR FURTHER INSTRUCTIONS

CORE CERTIFIED INSTALLER

JOB #:	CUST. ID #:	INSTALL	DESCRIPTION OF OPERATION:
6328705	DCV-1111		Demand Control Ventilation, w/ control for 1 Exhaust Fan, 1 Supply Fan, Exhaust on in Fire, Lights out in Fire, Fans modulate based on duct temperature. INVERTER DUTY 3 PHASE MOTOR REQUIRED FOR USE WITH VFD. Room temperature sensor shipped loose for field installation/verify distance between VFD and Motor; additional cost could apply if distance exceeds 50 feet.
	Windward ARC Kitchen - Bahan...	3/11/2024	ECP #1-8

PCU CORE FIRE PROTECTION PLUMBING DETAIL

04/11/2017 Rev. 14

PLUMBER:
1) CONNECT PCU CORE PANEL DRAIN
2) CONNECT PCU DRAIN
3) WHEN THE PCU IS INSTALLED ABOVE OR NEAR A FINISHED SPACE, THE INSTALLING CONTRACTOR MUST PROTECT THE FINISHED SPACE TO PREVENT WATER DAMAGE IN THE EVENT OF A FIRE SYSTEM DISCHARGE OR WHEN REGULAR CLEANING IS PERFORMED ON THE UNIT.

PCU-1 FS: SLAVE

PLUMBING CONTRACTOR REQUIREMENT					
ITEM	CONNECTION	MATERIAL	PRESSURE	FLOW RATE	COMMENTS
PCU CORE PANEL DRAIN	1 1/2" NPT	STAINLESS STEEL, COPPER, STEEL PIPE ONLY	SPRINKLER SYSTEM PRESSURE	CAPACITY OF THE SPRINKLER SYSTEM	CONNECT TO BUILDING DRAIN CAPABLE OF HANDLING WATER VOLUME. LINE MUST BE SLOPED AWAY FROM PANEL 1/4" PER FOOT.
PCU DRAIN	3" NPT	STAINLESS STEEL, COPPER, STEEL PIPE ONLY	N/A	CAPACITY OF THE SPRINKLER SYSTEM	CONNECT TO BUILDING GREASE INTERCEPTOR. LINE MUST BE SLOPED AWAY FROM POLLUTION CONTROL UNIT 1/4" PER FOOT.

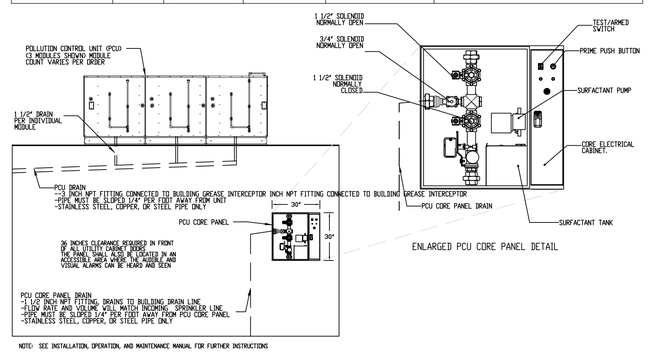

NOTE: SEE INSTALLATION, OPERATION, AND MAINTENANCE MANUAL FOR FURTHER INSTRUCTIONS

PLUMBING CONTRACTOR

REVISIONS	
DESCRIPTION	DATE

ADVANCED HOOD SYSTEMS
Advanced Hoods Systems, LLC
.. FL. PHONE: FAX: 9195275976 EMAIL: ashawn@advancedhoodsystems.com

Windward ARC Kitchen - Bahamas
Hialeah, FL,

DATE:	3/11/2024
DWG.#:	6328705
DRAWN BY:	jseward
SCALE:	3/4" = 1'-0"
MASTER DRAWING	
SHEET NO.	9

Windward ARC
Kitchen & Bar
Nassau, Bahamas

uni-source SUPPLY
INTERNATIONAL INC.
2055 W 73rd Street, Miami, FL 33016
Ph:(305)826-8696 Fax:(305)826-9131

No.	Revision/Issue	Date
5	Added MEP & Hood Shops	3-12-24
6	Moved Bev Table, adjusted hot line. Added Chef Desk.	4-4-25
7	Changed #9 Refrigerators, moved sink #117	4-20-25
8	Added modifications to #61-#21-#31	01-14-26

Date
Jan 14, 2026
Drawn By
Dayne Gauntlett
Scale
NTS

Sheet
FS-6.9